Clamps

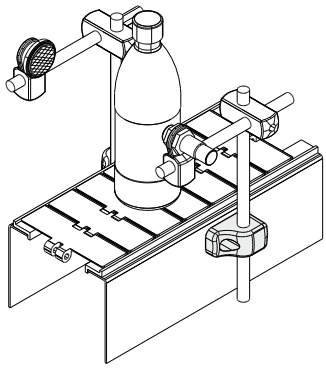

With blocking pin
(Suitable to support photocells)

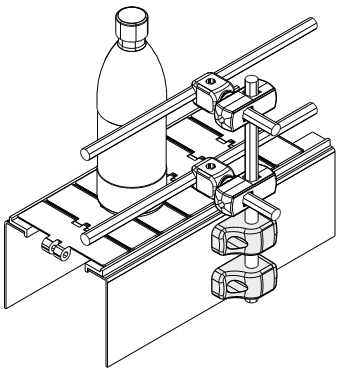

Without blocking pin
(Suitable to support guide)

Example of application

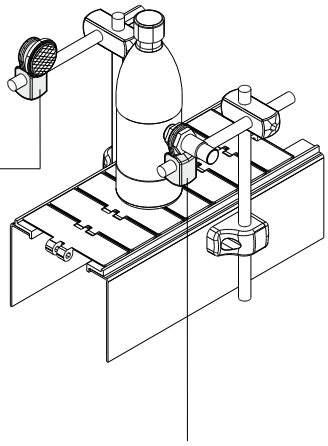

Type 1 (For photocells)

Clamp
(to support rails and photocells)

Part. **237**

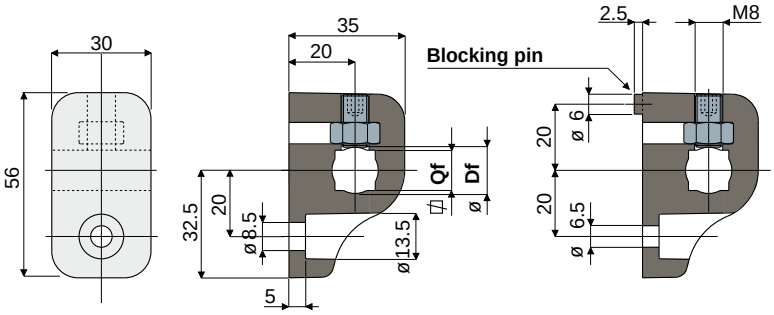

Without blocking pin **With blocking pin**

Bore for pin of Df round (mm)	Bore for pin of Qf square (mm)	Without blocking pin Code	With blocking pin Code
10	8	237 / 80958	237 / 80961
12	10	237 / 80959	237 / 80962
14	12	237 / 80960	237 / 80963

Clamp support for photocells
(for photocells and reflectors)

Part. **240**

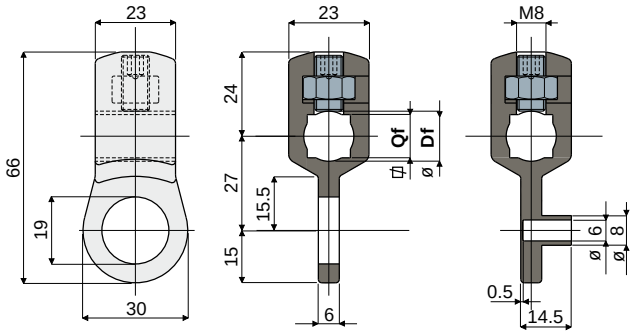

Type 1 (For photocells) **Type 2** (For reflectors)

Bore for pin of Df round (mm)	Bore for pin of Qf square (mm)	Type 1 (for photocells) Code	Type 2 (for reflectors) Code
10	8	240 / 80996	240 / 80997
12	10	240 / 80998	240 / 80999
14	12	240 / 81000	240 / 81001

MATERIALS: Clamp made of reinforced polyamide black colour; grub screw and nut made of stainless steel AISI 304.

FEATURES: This part can be used with round and square pins either.

BOX QUANTITY: 24 pieces.

ON REQUEST:

- Clamps: In reinforced polypropylene, other colours.
- Box quantity: According to your request.